WIRING DIAGRAM

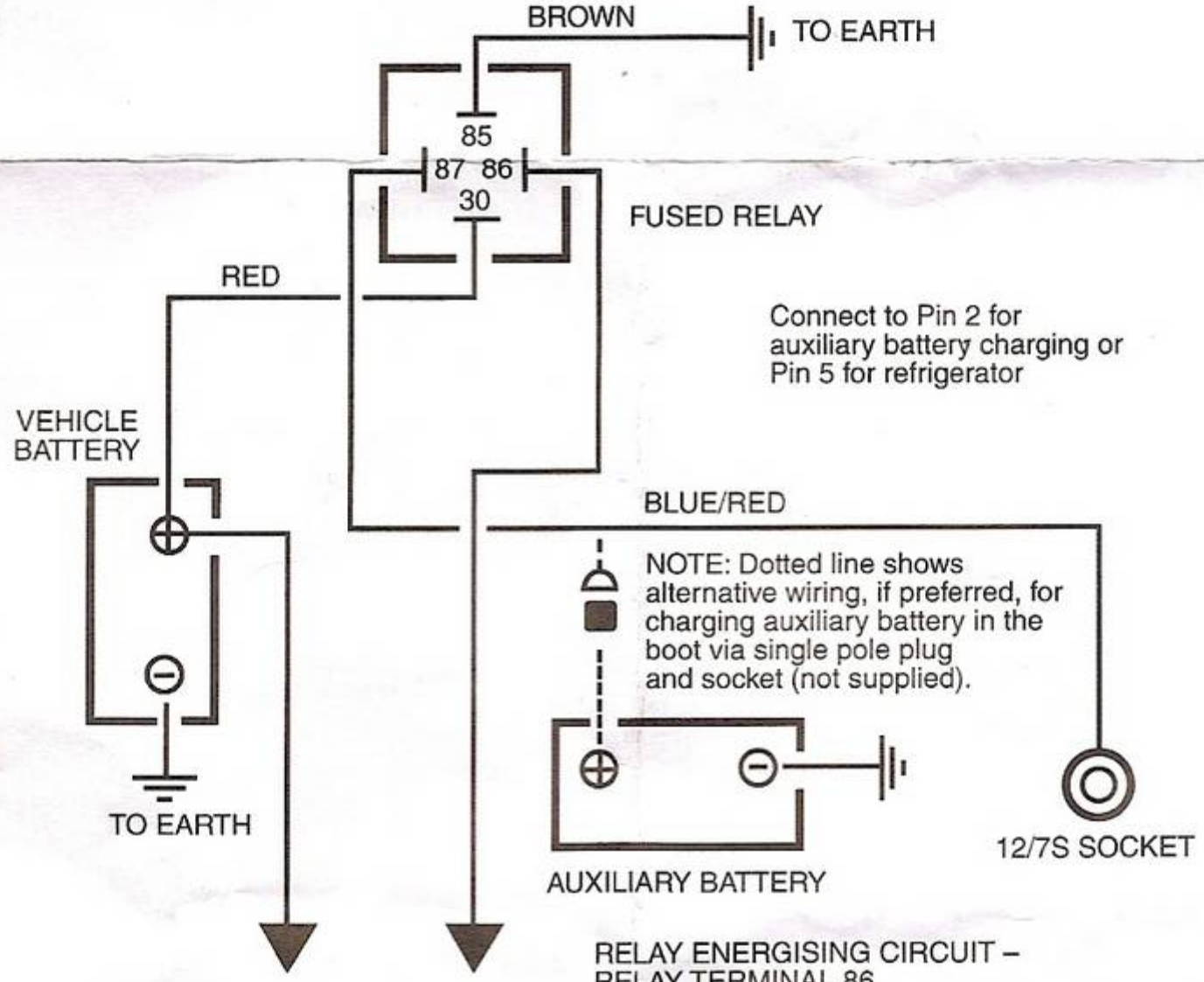

RELAY ENERGISING CIRCUIT –
RELAY TERMINAL 86
This lead should be connected with a 12V supply which only becomes alive when either the ignition is switched on, (not accessory side) or possibly when the engine is running, i.e. with the connection between alternator and warning light, this latter method should not be used for example on French, Japanese, Italian systems, or when difficulty is being experienced in tracing this circuit.